5 Maintenance

Preparing for Maintenance Procedures

Many of the procedures in this section require you to lift the door on the measurement module.

1. Grasp both sides of the front cover and pull it toward you.
2. Lift the front cover.
3. Push up the latches on the measurement module door.
4. Lift the door.

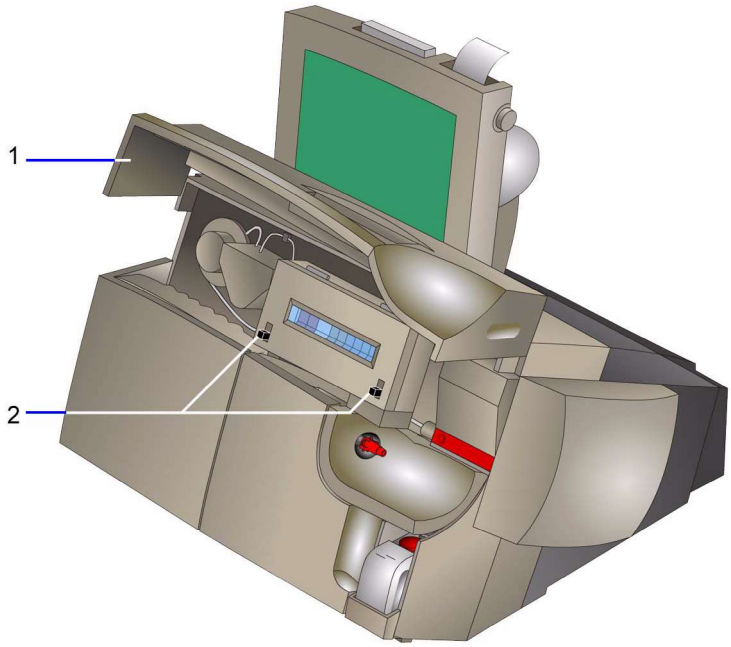

1 Front cover
2 Latches–measurement module

Figure 5-1 RAPIDLab 1200 System–Front Cover Open

Performing Daily Maintenance

Daily maintenance includes the following tasks:

- Checking system status
- Cleaning and disinfecting the exterior surfaces

Checking System Status

1. At the system user interface, select **Status**.
2. View the percent volume for the waste bottle, and percent volume and expiration date for each cartridge.

   Replace the cartridges and the waste bottle, if necessary.
3. View the list of unresolved messages in the Events Log.

   The system displays messages about current system conditions. Refer to *Viewing System Messages*, page 6-75.
4. Check the barometer pressure.

   Refer to *Calibrating the Barometric Sensor*, page 5-3.
5. Check the printer paper and replace it, if necessary.

   Refer to *Replacing the Printer Paper*, page 5-44.

Cleaning and Disinfecting the Exterior Surfaces

You need the following materials for this task:

- Lint-free cloth
- 10% bleach solution

BIOHAZARD: Wear personal protective equipment. Use universal precautions. Refer to *Appendix A, Protecting Yourself from Biohazards* for recommended precautions when working with biohazardous materials.

1. Moisten the cloth with the bleach solution so that the cloth is wet but not dripping.

CAUTION: Do not allow bleach or other cleaners to contact the inside surface of the sample port. The system could aspirate the cleaners and damage the sensors.

2. Wipe the exterior surfaces of the system using the wet cloth.
3. Allow the exterior surfaces to air dry.
4. Dispose of the bleach solution according to your institution's protocol.

Calibrating the Barometric Sensor

Use this procedure to calibrate the internal atmospheric pressure sensor to a barometer in your laboratory. Check the barometer calibration every day.

1. At the user interface, select **Status > Calibrate**.
2. Measure the atmospheric pressure using a high-quality barometer that has been calibrated to, or directly measures, actual atmospheric pressure.
3. Select **pAtm**.
4. Enter the correct atmospheric pressure and select **Save**.

Performing Twice Weekly Maintenance

The twice weekly maintenance schedule is based on analyzing 30 samples per day, unless otherwise noted. If your laboratory analyzes more than 30 samples per day, perform this maintenance more frequently.

Analyzing High G/L

Use this procedure to verify the performance of the Glucose and Lactate biosensors on RAPIDLab 1260 or 1265 systems. You analyze High G/L samples using the Patient mode and no correlation coefficients, but the system recalls the results as QC results.

The system measures Glucose and Lactate parameters for High G/L samples. Because the system only displays parameters that you turned on in Setup, if you turn off Glucose and Lactate in Setup, the system does not display the High G/L option.

You need the following materials for this task:

- High G/L ampule
- Quick adapter

1. Perform a successful 2-point calibration.

   Refer to *Performing Manual Calibrations*, page 3-4.
2. Prepare the High G/L ampule.
3. Insert a Quick adapter into the sample port and onto the ampule.
4. Select the High G/L ampule type, and then select **Analyze**.
5. When prompted, remove the sample device from the sample port and select **Continue**.
6. If prompted, enter demographic information and select **Continue**.
7. Review the results.

8. Glucose or Lactate results that are below the values recommended on the High G/L package insert can occur either when the sensor is nearing the end of its operating life, or is newly installed.
   - If the sensor is old, replace the affected biosensor. Refer to *Replacing the Sensors*, page 5-31.
   - If the sensor is new, wait 2 to 4 hours for the sensor to stabilize.

Performing Weekly Maintenance

Except as stated in the procedures, the weekly maintenance schedule is based on analyzing 30 samples per day, unless otherwise noted. If your laboratory analyzes more than 30 samples per day, perform this maintenance more frequently.

Weekly maintenance includes the following tasks:

- Deproteinizing the sample path
- Conditioning the sensors
- Checking the fill solution levels in the sensors

Deproteinizing the Sample Path

If you are analyzing less than 200 samples per day, deproteinize and condition your RAPIDLab 1200 system weekly. If you are analyzing more than 200 samples per day, or if your laboratory often processes certain types of blood, high hematocrit samples or blood with high TPN, you may need to run this procedure more often. Monitor your system and sensor performance, and adjust the frequency of this procedure as necessary.

You need the following materials for this task:

- Deproteinizer
- Syringe
- Glucose and Lactate test/blank sensors (TB4)

BIOHAZARD: Wear personal protective equipment. Use universal precautions. Refer to *Appendix A, Protecting Yourself from Biohazards* for recommended precautions when working with biohazardous materials.

CAUTION: Do not expose the glucose and lactate biosensors to bleach, conditioner, or deproteinizer. Replace the biosensors with the test/blank sensors (TB4) before conditioning the sensors or deproteinizing the sample path. Reinstall the biosensors within 2 hours.

CAUTION: Do not remove or return the sensors to the measurement module without first discharging static buildup. Touch the inner surface of the measurement module frame to discharge static buildup.

1. Prepare the deproteinizer as directed on the package.
2. Select **Status > Maintenance > Deproteinizing the Sample Path**.
3. Select **Continue**.
4. If you have a RAPIDLab 1260 or 1265 system, replace the Glucose and Lactate biosensors with the test/blank sensors:
   a. Select the video button and follow the instructions in the video.
   b. Select **Continue**.
5. Aspirate the deproteinizer:
   a. Invert the deproteinizer vial several times to mix the contents.
   b. Draw the deproteinizer into a syringe and insert the syringe into the sample port.
   c. Select **Continue**.
   d. When prompted, remove the syringe and select **Continue**.
      The deproteinizing cycle runs for 10 minutes. Any mechanical noise in the area of the sample port is normal and dissipates after the system analyzes a few blood samples.
6. At the prompt, select **Yes** to condition the sensors or **No** to skip this step.
   Refer to *Conditioning the Sensors*, page 5-7.
7. If you are not conditioning the sensors and you have a RAPIDLab 1260 or 1265 system, replace the test/blank sensors with the biosensors:
   a. Select the video button and follow the instructions in the video.
   b. Select **Continue**.
8. Select **Return**.
9. Select **Analyze**.
10. If you have a RAPIDLab 1260 or 1265 system, select **Yes**.
11. Analyze a minimum of 2 levels of quality control material to verify sensor performance.

Conditioning the Sensors

Conditioning cleans and conditions the glass membranes of the pH and sodium sensors.

You need the following materials for this task:

- Conditioner
- Syringe
- Glucose and Lactate test/blank sensors (TB4)

BIOHAZARD: Wear personal protective equipment. Use universal precautions. Refer to *Appendix A, Protecting Yourself from Biohazards* for recommended precautions when working with biohazardous materials.

CAUTION: Do not expose the glucose and lactate biosensors to bleach, conditioner, or deproteinizer. Replace the biosensors with the test/blank sensors (TB4) before conditioning the sensors or deproteinizing the sample path. Reinstall the biosensors within 2 hours.

CAUTION: Do not remove or return the sensors to the measurement module without first discharging static buildup. Touch the inner surface of the measurement module frame to discharge static buildup.

1. At user interface, select **Status > Maintenance**.
2. Select **Conditioning the Sensors**.
3. Select **Continue**.
4. Select the video button and follow the instructions in the video.
5. If you have a RAPIDLab 1260 or 1265 system, replace the Glucose and Lactate biosensors with the test/blank sensors:
   a. Select the video button and follow the instructions in the video.
   b. Select **Continue**.

6. Aspirate the conditioner:
   a. Draw the conditioner solution into a syringe and insert the syringe into the sample port.
   b. Select **Continue**.
   c. When prompted, remove the syringe and select **Continue**.
      The conditioning cycle runs for 10 minutes.
7. If you have a RAPIDLab 1260 or 1265 system, replace the test/blank sensors with the biosensors.
8. Select **Return**.
9. Select **Analyze**.
10. If you have a RAPIDLab 1260 or 1265 system, select **Yes**.
11. If you have a RAPIDLab 1240 or 1245 system, perform a 2-point calibration.
    Refer to *Performing Manual Calibrations*, page 3-4.
12. Analyze a minimum of 2 levels of quality control material to verify sensor performance.

Checking the Level of Fill Solution

Use this procedure to ensure that the sensors contain the correct level of fill solution.

The pO_2 and pCO_2 sensors do not require maintenance. Slight discoloration of the fill solution in the pO_2 and pCO_2 sensors is normal.

The Glucose and Lactate biosensors do not require fill solution.

BIOHAZARD: Wear personal protective equipment. Use universal precautions. Refer to *Appendix A, Protecting Yourself from Biohazards* for recommended precautions when working with biohazardous materials.

CAUTION: Do not remove or return the sensors to the measurement module without first discharging static buildup. Touch the inner surface of the measurement module frame to discharge static buildup.

1. Select **Status > Maintenance > Performing Sensor Maintenance**.
2. Select **Continue**.
3. Lift the door to the measurement module.
   Refer to *Preparing for Maintenance Procedures*, page 5-1.

4. Check the level of fill solution in the reference sensor:
   a. Verify that the reference sensor fill solution is above the fill line.
      The fill line is on the right side of the KCl reservoir.

      NOTE: The fill solution can become slightly pink as a result of analyzing QC and AutomaticQC materials. A pink color that becomes very dark over a 12 hour period indicates a pending failure of the reference sensor. When this occurs, replace the reference sensor or the reference sensor cassette.
   b. If the level of fill solution is low, fill the sensor.
      Refer to *Performing Reference Sensor Maintenance*, page 5-36.
5. Check the level of fill solution in the K^+, Cl^-, Ca^{++}, Na^+, and pH sensors:
   a. Verify that the K^+, Cl^-, and Ca^{++} sensors are almost full with a small (1 mm) bubble at the top.
   b. Verify that the pH and Na^+ sensors are completely full.
   c. If the level of fill solution is low, replace the fill solution.
      Refer to *Performing Measurement Sensor Maintenance*, page 5-42.
6. Close the measurement module door and close the front cover.
7. Allow the system to warm up for 10 minutes.
8. Select **Yes**.
9. Select **Continue > Return**.
10. Select **Analyze > Yes**.
11. Analyze a minimum of 2 levels of quality control material to verify sensor performance.

Performing Every 60 Days Maintenance

The every 60 days maintenance schedule is based on analyzing 30 samples per day, unless otherwise noted. If your laboratory analyzes more than 30 samples per day, perform this maintenance more frequently.

Replacing the CO-ox Sample Chamber

You need a new CO-ox sample chamber to perform this task.

BIOHAZARD: Wear personal protective equipment. Use universal precautions. Refer to *Appendix A, Protecting Yourself from Biohazards* for recommended precautions when working with biohazardous materials.

1. Select **Status > Maintenance > Replacing the CO-ox Sample Chamber**.
2. To start the procedure, select **Continue**.
3. Follow the instructions in the video.
4. Allow the system to warm up for 5 minutes.
5. Perform a full calibration.
   Refer to *Recalling Calibration Results*, page 3-4.
6. Analyze a minimum of 2 levels of quality control material.

Checking the Air Filters

1. Select **Status > Maintenance > Replacing the Air Filter**.
2. Select **Continue**.
3. To remove the filters, follow the instructions in the video.
4. Shake the filters to remove dust.
   If the filters are torn or cannot be cleaned, replace the filters.
5. To reinstall the filters, follow the instructions in the video.

Performing Quarterly Maintenance

The quarterly maintenance schedule is based on analyzing 30 samples per day, unless otherwise noted. If your laboratory analyzes more than 30 samples per day, perform this maintenance more frequently.

Replacing the Pinch Valve Tubing

You need a tubing kit for this task.

BIOHAZARD: Wear personal protective equipment. Use universal precautions. Refer to *Appendix A, Protecting Yourself from Biohazards* for recommended precautions when working with biohazardous materials.

1. At the user interface, select **Status > Diagnostics > Cartridges**.
2. Select **Eject R Cartridge**.
3. Lift the door on the measurement module.

   Refer to *Preparing for Maintenance Procedures*, page 5-1.
4. Remove the old tubing:
   a. Remove the tubing from the connector at the spring-loaded latch.

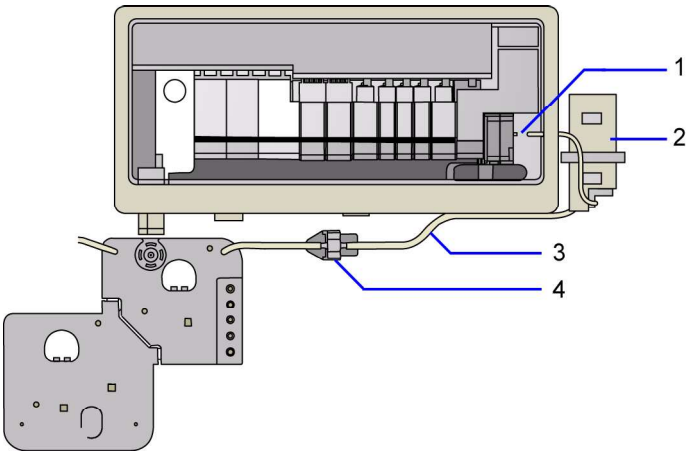

1 Connector at the spring-loaded latch
2 Pinch valve
3 Pinch valve tubing
4 Pressure detector bubbler

Figure 5-2 Measurement Module–RAPIDLab 1260 and 1265 Systems

   b. Pull the tubing out of the pinch valve.

   c. Disconnect the tubing from the connector at the pressure sensor bubbler.
5. Connect the new tubing:
   a. Connect the new tubing to the spring-loaded latch.
   b. Push the new tubing into the pinch valve.
      Center the tubing and ensure the tubing does not have any sharp bends.
   c. Connect the new tubing to the pressure sensor bubbler.
6. Close the measurement module door.
7. Select **No**.
8. Reinstall the reagent cartridge and close the reagent cartridge door.
9. Close the front cover.
10. Dispose of the tubing according to your institution's protocol.

Testing for Leaks

1. To ensure that the tubing has been properly reinstalled, perform the Leak Test.
   Refer to *Performing the Leak Test*, page 6-37.
2. Select **Return > Analyze > Yes**.

Yearly Maintenance

Yearly maintenance includes the following tasks:

- Replacing the measurement module tubing and pressure sensor bubbler
- Replacing the CO-ox tubing
- Replacing the reagent manifold
- Replacing the AutomaticQC manifold
- Replacing the air filters

Replacing the Measurement Module Tubing

You need a tubing kit for this task.

BIOHAZARD: Wear personal protective equipment. Use universal precautions. Refer to *Appendix A, Protecting Yourself from Biohazards* for recommended precautions when working with biohazardous materials.

1. Select **Status > Diagnostics > Cartridges**.
2. Select **Eject R Cartridge**.
3. Lift the door on the measurement module.

   Refer to *Preparing for Maintenance Procedures*, page 5-1.
4. Replace the pinch valve tubing.

   Perform steps 4 and 5 of *Replacing the Pinch Valve Tubing*, page 5-11.
5. Replace the waste tubing between the pressure sensor bubbler and the reagent manifold:
   a. Disconnect the waste tubing from the pressure sensor bubbler and the reagent manifold.

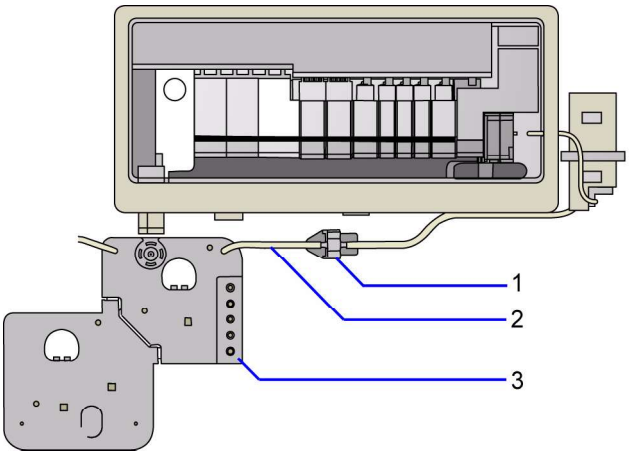

1 Pressure sensor bubbler
2 Waste tubing
3 Reagent manifold

Figure 5-3 Measurement Module–RAPIDLab 1260 and 1265 systems

b. Connect the new tubing to the pressure sensor bubbler and to the reagent manifold.

6. Dispose of the tubing according to your institution's protocol.
7. Close the reagent cartridge door and then close the front cover.
8. If you have a RAPIDLab 1245 or 1265 system and are replacing the CO-ox tubing, continue with step 2 of *Replacing the CO-ox Module Tubing*, page 5-14.
9. Close the measurement module door.
10. Select **No**.
11. Select **Return > Analyze > Yes**.

Replacing the CO-ox Module Tubing

You need a CO-ox tubing kit for this task.

BIOHAZARD: Wear personal protective equipment. Use universal precautions. Refer to *Appendix A, Protecting Yourself from Biohazards* for recommended precautions when working with biohazardous materials.

1. Select **Status > Diagnostics > Cartridges**.
2. Select **Eject W Cartridge** and remove the wash cartridge.
3. Lift the door to the measurement module.

   Refer to *Preparing for Maintenance Procedures*, page 5-1.

Replacing the CO-ox Sample Tubing

1. Disconnect the sample tubing from the connector on top of the sample chamber.

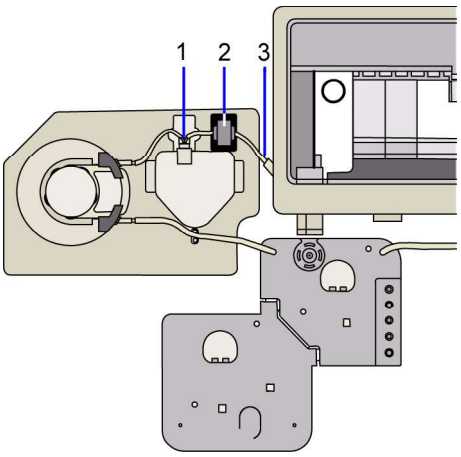

1 Sample chamber connector
2 Fluid detector
3 Measurement module connector

Figure 5-4 Measurement Module Sample Chamber

2. Rotate the gray wheel towards you, pull the tubing through the fluid detector, and remove the tubing from the steel measurement module connector.
3. Push the new tubing through the fluid detector.
4. Connect the tubing to the steel measurement module connector and to the sample chamber connector.

   Use a clamp or tweezers to attach the tubing.

Replacing the CO-ox Waste Tubing

1. Disconnect the CO-ox waste tubing from the pump tubing and the sample chamber connector.

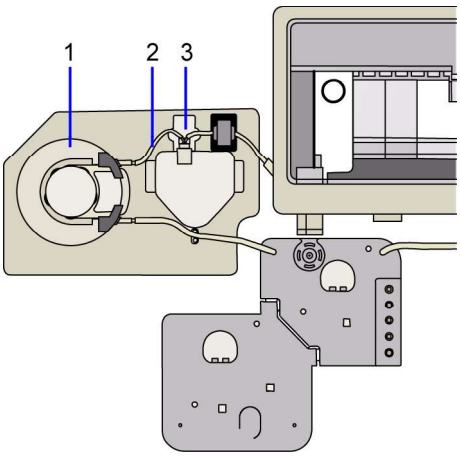

1 CO-ox pump tubing
2 CO-ox waste tubing
3 Sample chamber

Figure 5-5 CO-ox Module Tubing

2. Connect the CO-ox waste tubing to the CO-ox pump tubing and the sample chamber connector.

Replacing the CO-ox Pump Tubing

1. Disconnect the CO-ox pump tubing from the CO-ox waste tubing.

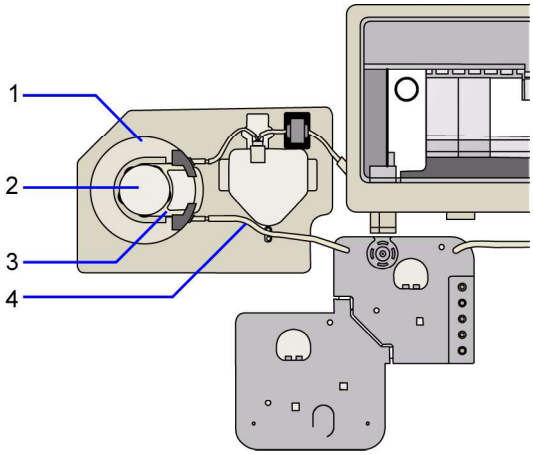

1 Roller cage
2 Platen
3 Lower tubing cuff
4 Reagent manifold tubing

Figure 5-6 CO-ox Module and Reagent Manifold

2. Disconnect the CO-ox pump tubing from the reagent manifold tubing at the fitting.
3. Do not disconnect the reagent manifold tubing from the reagent manifold.
4. Grasp the lower tubing cuff and pull the tubing away from the platen and the roller cage.
5. Place the lower tubing cuff of the new tubing under the lower side of the platen, press the tubing around the outside of the rollers, and turn the roller cage clockwise until the tubing rests on the rollers.
6. Connect the tubing to the waste tubing and the reagent manifold tubing.

Completing CO-ox Maintenance

1. Close the front cover.
2. Reinstall the wash cartridge.
3. Dispose of the tubing according to your institution's protocol.
4. Select **Return**.
5. Continue performing yearly maintenance or perform a full calibration.

Replacing the Reagent Manifold

You need a reagent manifold for this task. See Appendix D for part numbers.

BIOHAZARD: Wear personal protective equipment. Use universal precautions. Refer to *Appendix A, Protecting Yourself from Biohazards* for recommended precautions when working with biohazardous materials.

1. Ensure that you have security access Level 1 or Level 2, which is required to access diagnostics features.
2. Select **Status > Diagnostics**.
3. Enter your password, if necessary.
4. At the Diagnostics screen, select **Cartridges > Eject Both Cartridges**.
5. Remove the reagent and wash cartridges, and set them aside.
6. Remove the reagent manifold:
   a. Lift the front cover.
      Refer to *Preparing for Maintenance Procedures*, page 5-1.
   b. Disconnect the waste tubing from the port on the top, right side of the reagent manifold. See Figure 5-7, item 4.

      - If using a RAPIDLab 1245 or 1265 system, proceed to step c.
      - If using a RAPIDLab 1240 or 1260 system, proceed to step e.

   c. Disconnect the reagent manifold tubing (Figure 5-7, item 2) from the fitting that connects the tubing to the CO-ox pump tubing (Figure 5-7, item 1).
   d. Remove the fitting from the CO-ox pump tubing (Figure 5-7, item 1).The new reagent manifold uses a different fitting.
   e. Detach the manifold from the system, by pushing down the 2 latches that are located in the holes in the manifold, at the same time you push up on the 2 latches that are located at the bottom of the manifold (Figure 5-7, item 5).

f. Carefully pull the reagent manifold out slightly, then straight down, to avoid the sample connector (Figure 5-7, item 3)

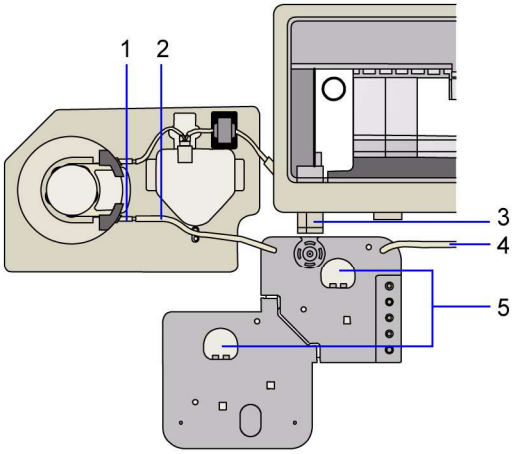

1 Fitting that connects the reagent manifold tubing and CO-ox pump tubing (RAPIDLab 1245 and 1265 systems)

2 Reagent manifold tubing that connects the fitting to the port on the top, left side of the reagent manifold (RAPIDLab 1245 and 1265 systems)

3 Sample connector

4 Waste tubing connected to port on top, right-side of the reagent manifold

5 Latches that secure the reagent manifold to the system

Figure 5-7 Reagent Manifold and Tubing Connections (1245/1265 version shown)

7. Discard the manifold and fitting according to your site's disposal policy.
8. Install the new reagent manifold:
   a. Insert the reagent manifold, and press the 4 latches (Figure 5-7, item 5) until the manifold is secured to the system.
      - If using a RAPIDLab 1245 or 1265 system, proceed to step b.
      - If using a RAPIDLab 1240 or 1260 system, proceed to step c.
   b. Insert the male fitting (Figure 5-7, item 1), that extends from the new reagent manifold tubing, directly into the CO-ox pump tubing (RAPIDLab 1245 and 1265 systems).
   c. Reinsert the waste tubing into the port on the top, right side of the reagent manifold (Figure 5-7, item 4).

Completing Reagent Manifold Maintenance

1. Reinstall the reagent and wash cartridges.
2. Close the reagent and wash module doors.
3. Close the front cover of the system.
4. Select **Return** (back arrow) twice to exit Diagnostics mode.
5. When you are prompted to calibrate the system, select **Yes**.
   a. Perform a 2-point calibration.
      Refer to *Performing Manual Calibrations*, page 3-4.
   b. Analyze a minimum of 2 levels of quality control material.

Replacing the AutomaticQC Manifold

You need an AutomaticQC manifold for this task. See Appendix D for part numbers.

1. Press down on the left side of the AutomaticQC cartridge connector and slide the connector to the right.
2. Select **Continue**.
3. Select **Diagnostics > Cartridges**.
4. Select **Eject R Cartridge**, remove the reagent cartridge, and set it aside.
5. Lift the front cover.

   Refer to *Preparing for Maintenance Procedures*, page 5-1.
6. Remove the AutomaticQC manifold:
   a. Pull the connector port cover towards you.

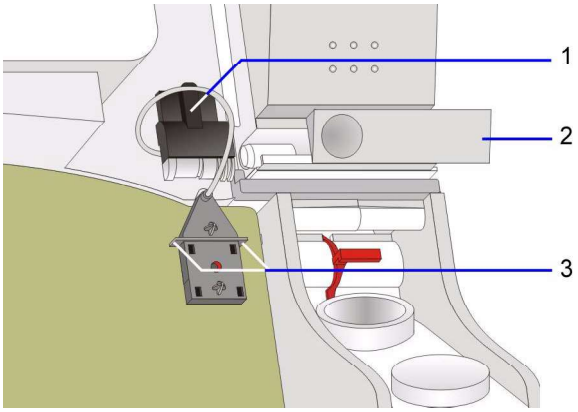

1 Connector port cover
2 Cartridge connector
3 Pins

Figure 5-8 Connector Port and Cover

   b. Push down on the pins on the manifold and pull the manifold and connector port away.
7. Install the new AutomaticQC manifold:
   a. Insert the bottom clip into the opening on the system.

b. Align the tube loop that is on the back of the manifold with the groove in the system.

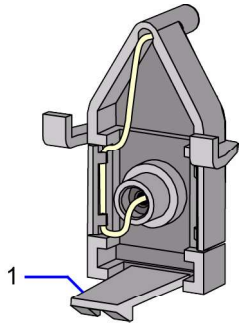

1 Bottom clip

Figure 5-9 AutomaticQC Manifold–Back View

c. Insert the top clips into the holes and release the clips to lock them in place.

d. Insert the connector port into the indentation in the system wall and replace the connector port cover.

8. Slide the cartridge connector to the left.

Completing AutomaticQC Manifold Maintenance

1. Close the front cover.
2. Reinstall the reagent cartridge.
3. Select **Return**.
4. Verify system performance:
   a. Perform a 2-point calibration.
   Refer to *Performing Manual Calibrations*, page 3-4.
   b. Analyze a minimum of 2 levels of quality control material.
5. Dispose of the manifold and connector port according to your institution's protocol.

Replacing the Air Filters

You need 2 air filters for this task.

1. Select **Status > Maintenance > Replacing the Air Filter**.
2. Select **Continue**.
3. Follow the instructions in the video.

Cleaning Procedures

This section provides procedures for performing as needed cleaning.

Cleaning and Disinfecting the Screen

Use a lint-free cloth to clean the screen. Do not use a spray bottle to spray the bleach solution on the screen.

You need the following materials for this task:

- Lint-free cloth
- 5% bleach solution

BIOHAZARD: Wear personal protective equipment. Use universal precautions. Refer to *Appendix A, Protecting Yourself from Biohazards* for recommended precautions when working with biohazardous materials.

1. Moisten the cloth with the bleach solution so that the cloth is wet but not dripping.
2. Select **Status > Maintenance > Cleaning the Screen**.
3. To start the procedure, select **Continue**.

   The cleaning screen is displayed for 20 seconds and allows you to wipe the screen without activating any buttons.
4. Wipe the screen with the wet cloth.
5. Allow the screen to air dry.

   After 20 seconds, the system returns to the Maintenance screen.
6. Dispose of the bleach solution according to your institution's protocol.

Cleaning the Sample Path

Use this procedure to clean the sample path with bleach.

You need the following materials for this task:

- 10% bleach solution
- syringe
- lint-free tissue or swabs
- deproteinizer
- test/blank reference sensor (TB5)
- test/blank Glucose sensor (TB4)
- test/blank Lactate sensor (TB4)

BIOHAZARD: Wear personal protective equipment. Use universal precautions. Refer to *Appendix A, Protecting Yourself from Biohazards* for recommended precautions when working with biohazardous materials.

CAUTION: Do not expose the reference sensor to bleach. Replace the reference sensor with the test/blank reference sensor (TB5) before cleaning.

CAUTION: Do not expose the glucose and lactate biosensors to bleach, conditioner, or deproteinizer. Replace the biosensors with the test/blank sensors (TB4) before conditioning the sensors or deproteinizing the sample path. Reinstall the biosensors within 2 hours.

CAUTION: Do not use alcohol to perform this procedure. Alcohol can damage the sensors.

CAUTION: Do not remove or return the sensors to the measurement module without first discharging static buildup. Touch the inner surface of the measurement module frame to discharge static buildup.

1. Select **Status > Maintenance > Deproteinizing the Sample Path**.
2. To start the procedure, select **Continue**.
3. Replace the reference sensor and the biosensors with the test/blank sensors:
   a. Lift the door to the measurement module.
   Refer to *Preparing for Maintenance Procedures*, page 5-1.

b. Push the spring-loaded latch to the right, grasp the tab on the reference sensor, and pull the reference sensor up and out.

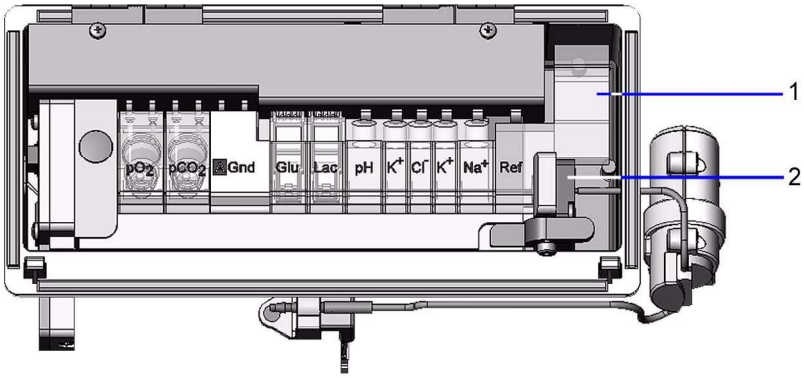

1 Reference sensor
2 Spring-loaded latch

Figure 5-10 Measurement Module

c. Align the top of the test/blank reference sensor (TB5) with the sensor contact and snap the sensor into place.

4. If you have a RAPIDLab 1260 or 1265 system, replace the Glucose and Lactate biosensors with the test/blank Glucose Lactate (TB4) sensors.

   Refer to step 3.

5. Close the measurement module door and then close the front cover.

6. Aspirate the deproteinizer:

   a. Invert the deproteinizer vial several times to mix the deproteinizer solution.

   b. Draw the deproteinizer into a syringe and insert the syringe into the sample port.

   c. Select **Continue**.

   d. When prompted, remove the syringe and select **Continue**.

   The system displays a message prompting you to condition the sensors.

7. Perform the cleaning cycle:
   a. Select **Yes**.
   b. Draw the 10% bleach solution into a syringe and insert the syringe into the sample port.
   c. Select **Continue**.
   d. When prompted, remove the syringe and select **Continue**.
      Do not replace the test/blank sensors at this time.
8. Select **Continue**.
9. Select **Wash Cycle**.

Reinstalling the Reference Sensor and Biosensors

1. Lift the front cover and then lift the measurement module door.
2. Push the spring-loaded latch to the right.
3. Grasp the tab on the test/blank reference sensor and pull the sensor up and out.
4. Align the top of the reference sensor with the sensor contact.
5. Snap the sensor into place.
6. If you have a RAPIDLab 1260 or 1265 system, replace the test/blank sensors with the Glucose and Lactate sensors.

Completing the Sample Path Maintenance

1. Use the sensor names on the contact assembly to verify that the sensors are installed in the correct order.
2. Press the tab on the spring-loaded latch to release the latch.
3. Close the measurement module door and then close the front cover.
4. Wait 30 minutes for the sensors to warm up.
5. Select **Return > Analyze > Yes**.
6. Analyze a minimum of 2 levels of quality control material.
7. Dispose of the bleach solution according to your institution's protocol.

Cleaning the CO-ox Roller Cage

Use this procedure to clean the roller cages of the CO-ox pump.

You need the following materials for this task:

- Lint-free tissue and swabs
- 10% bleach solution
- water

BIOHAZARD: Wear personal protective equipment. Use universal precautions. Refer to *Appendix A, Protecting Yourself from Biohazards* for recommended precautions when working with biohazardous materials.

1. Select **Status > Maintenance**.
2. Lift the front cover.

   Refer to *Preparing for Maintenance Procedures*, page 5-1.
3. Disconnect the reagent manifold tubing from the CO-ox pump tubing at the fitting.

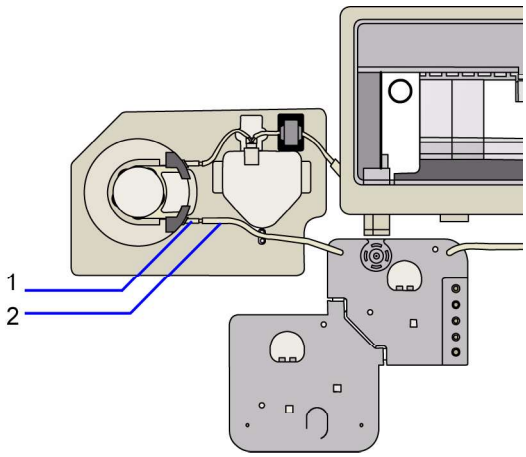

1 Fitting
2 Reagent manifold tubing

Figure 5-11 CO-ox Pump Tubing to Reagent Manifold

4. Grasp the lower tubing cuff and gently pull it away from the platen.

5. While holding the lower side of the tubing, turn the roller cage clockwise and gently pull the tubing away from the platen and the roller cage.

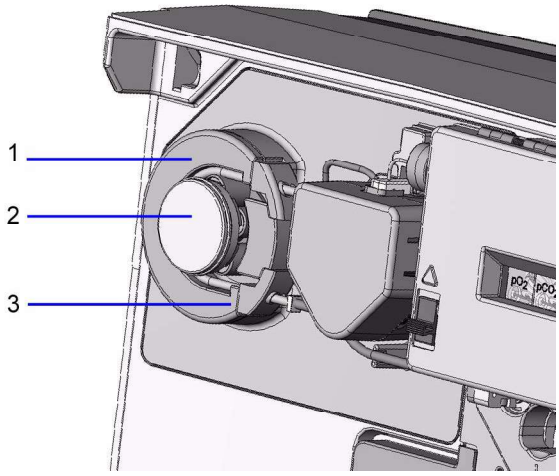

1 Platen
2 Roller cage
3 Lower tubing cuff

Figure 5-12 CO-ox Module

6. Gently pull the roller cage straight off its shaft.

Cleaning the Roller Cage

1. Clean the rollers and the roller cage shaft using lint-free tissues moistened with the bleach solution.
2. Clean the interior surface of the roller cage using a lint-free swab moistened with the bleach solution.
3. Rinse the rollers, the cage, and the shaft with water.
4. Dry the roller cage thoroughly and ensure that the rollers turn freely.

Reinstalling the Roller Cage

1. Replace the roller cage onto the shaft.
2. Press the roller cage down and turn it clockwise until the cage snaps into place.

Reconnecting the CO-ox Tubing

1. Place the lower tubing cuff under the lower side of the platen.

   NOTE: Do not stretch the tubing.
2. Press the tubing around the outside of the rollers.
3. Place the upper tubing cuff onto the upper side of the platen.
4. Turn the roller cage clockwise to gently work the new tubing between the platen and the roller cage.
5. Connect the CO-ox pump tubing to the reagent manifold tubing.
6. Select **Return**.
7. Perform a full calibration.

   Refer to *Performing Manual Calibrations*, page 3-4.
8. Dispose of the bleach solution according to your institution's protocol.

Cleaning the Waste Assembly

Use this procedure to clean the waste assembly when you are replacing an expired or depleted AutomaticQC cartridge. Removing the AutomaticQC cartridge invalidates the cartridge.

You need the following materials for this task:

- New AutomaticQC cartridge
- Lint-free cloth
- 10% bleach solution
- Waste bottle

BIOHAZARD: Wear personal protective equipment. Use universal precautions. Refer to *Appendix A, Protecting Yourself from Biohazards* for recommended precautions when working with biohazardous materials.

1. Remove the expired or depleted AutomaticQC cartridge:
   a. Select **Status > AutomaticQC Cartridge > Replace > Yes**.
   b. Follow the instructions in the video.
2. Dispose of the AutomaticQC cartridge according to your institution's protocol.
3. Remove the waste bottle and dispose of it according to your institution's protocol.

4. Remove the waste assembly:
   a. Lift the orange lever up.

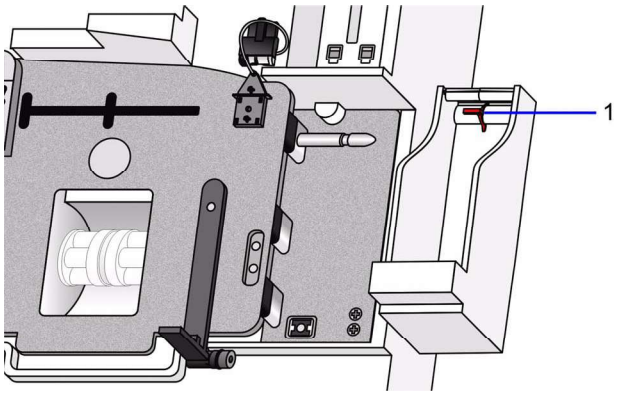

1 Orange lever

Figure 5-13 Waste Assembly

   b. Slide the waste assembly to the right.
5. Clean the waste assembly with the 10% bleach solution.
6. Replace the waste assembly and push the orange lever down.
7. Place the new waste bottle in the waste assembly.
8. Install a new AutomaticQC cartridge.
9. Select **Return**.
10. Dispose of the bleach solution according to your institution's protocol.

Maintaining the Sensors

Performing regular maintenance on the sensors is important to the life of the sensors. This section contains the following information:

- Replacing the sensors
- Performing reference sensor maintenance
- Refilling the sensors

Replacing the Sensors

You need the following materials for this task:

- Appropriate sensor
- Appropriate sensor fill solution
- Reference sensor replacement kit
- Hex tool
- Lint-free tissue

BIOHAZARD: Wear personal protective equipment. Use universal precautions. Refer to *Appendix A, Protecting Yourself from Biohazards* for recommended precautions when working with biohazardous materials.

CAUTION: Do not remove or return the sensors to the measurement module without first discharging static buildup. Touch the inner surface of the measurement module frame to discharge static buildup.

Preparing the Sensors

- Equilibrate new Glucose and Lactate biosensors at room temperature (18° to 25°C) for at least 1 hour before installing.
- Keep the biosensors in their foil packages while they are equilibrating.

Removing the Sensors

1. Select **Status > Maintenance > Performing Sensor Maintenance**.
2. To start the procedure, select **Continue**.
3. Remove the sensor:
   a. Lift the door to the Measurement module.
   Refer to *Preparing for Maintenance Procedures*, page 5-1.
   b. Push the spring-loaded latch to the right.

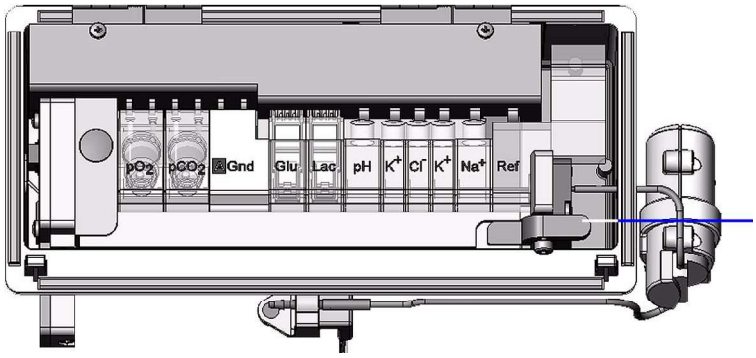

1 Spring-loaded latch

Figure 5-14 RAPIDLab 1260 or 1265 Measurement Module

   c. Grasp the tab on the sensor and pull the sensor up and out.
   d. Discard the sensor according to your institution's policy.
4. If you are replacing a measurement sensor, refer to *Performing Measurement Sensor Maintenance*, page 5-42
5. If you are replacing the reference sensor, fill the internal electrode compartment.
   Refer to *Filling the Reference Sensor Cassette*, page 5-38.
6. If you are replacing the reference sensor or measurement sensors, install the internal electrode into the internal electrode compartment and screw the electrode into place.
7. Clean and inspect the sensor:
   a. Tap the front face of the sensor with your knuckle to remove any bubbles.
   b. Wipe any excess fill solution from the exterior of the sensor using a lint-free tissue.
   c. Ensure that the O-ring is in place:
      - Reference sensor has an O-ring on both sides of the sensor.
      - All other sensors have an O-ring on the left side of the sensor.

Installing the Sensor

1. Align the top of the sensor with the sensor contact.
2. Use the sensor names on the contact assembly to verify that the sensors are installed in the correct order.
3. Snap the sensor into place.
4. Press the tab on the spring-loaded latch down to release the latch.
5. Close the measurement module door and then close the front cover.
6. Select **Yes > Continue > Wash Cycle**.

Verifying Sensor Performance

If you replaced...	Then...
sample ground/temperature sensor,	check the sample path temperature: a. Select **Status > Diagnostics > Temperature**. b. Check the printout for the sample temperature reading. c. Select **Return** twice.
reference sensor or measurement sensors,	wait 30 minutes for the sensors to warm up.
Glucose or Lactate biosensors,	a. Select **Calibrate > 2-point**. The calibrations start hydrating the biosensors. b. Allow the biosensors to warm up for at least 30 minutes.

1. Select **Return > Analyze > Yes**.
2. Inspect the sensor for bubbles.

   As the temperature of the sensor rises to 37°C, gas driven from the solution causes bubbles.
3. If bubbles are in the sensor, remove the bubbles:
   a. Select **Status > Maintenance > Performing Sensor Maintenance**.
   b. To start the procedure, select **Continue**.
   c. Remove the sensor.
   d. Tap the front face of the sensor with your knuckle to remove bubbles.
   e. Reinstall the sensor.
   f. Select **Yes > Continue > Return**.
   g. Select **Analyze > Yes**.
   h. Wait 15 to 30 minutes for the sensor to warm up.

4. If you replaced the pH or Na^+ sensors, condition the sensors.

   Refer to *Conditioning the Sensors*, page 5-7.

5. Analyze a minimum of 2 levels of quality control material.

Filling the Sensor

You need the following materials for this task:

- pH or Na^+, K^+, Cl^-, and Ca^{++} sensor
- appropriate sensor fill solution kit containing a fill solution vial and a cylinder that contains a needle
- lint-free tissue or cloth

BIOHAZARD: Wear personal protective equipment. Use universal precautions. Refer to *Appendix A, Protecting Yourself from Biohazards* for recommended precautions when working with biohazardous materials.

CAUTION: Do not remove or return the sensors to the measurement module without first discharging static buildup. Touch the inner surface of the measurement module frame to discharge static buildup.

NOTE: D2, D3, and D4 error codes may result when bubbles are detected in the fill solution. This procedure is designed to minimize the occurrence of bubbles in the fill solution.

NOTE: Bubbles on the surface of the fill solution are acceptable. Only bubbles in the fill solution result in D2, D3, and D4 error codes.

NOTE: Do not shake the vial containing the fill solution. This can create bubbles in the fill solution.

1. Remove the sensor.

   Refer to *Replacing the Sensors*, page 5-31.

   If the sensor is new, go to step 4.

2. Unscrew the internal electrode and place the electrode and sensor assembly on a lint-free tissue.

3. Empty the fill solution from the sensor.

   Dispose of the fill solution according to your institution's protocol.

4. Attach the needle to the fill solution vial.

   a. Twist off the top of the vial that contains the fill solution.

   b. Slide the smaller, open-end of the needle cylinder onto the fill solution vial.

c. Remove the cylinder, so the needle remains attached to the vial.

5. Rinse the sensor.
   a. Insert the needle, attached to the vial, into the sensor.
   b. Gently squeeze the fill solution vial until the sensor is full of solution.
   c. Eject the fill solution so the sensor is empty.
      Dispose of the fill solution according to your institution's protocol.
6. Fill the sensor.
   a. Squeeze the fill solution vial until a drop is emitted or remains at the tip of the needle.
      This helps minimize the occurrence of bubbles once the needle is inserted in the sensor.
   b. Insert the needle, attached to the fill solution vial, until the needle is near the bottom of the sensor.

For these sensors...	Add...
pH Na^+, K^+, Cl^-, and Ca^{++}	until sensor is almost full but with a small space (1 mm) at the top

   c. Slowly raise the needle as you gently squeeze the fill solution vial, until the sensor is nearly full.

CAUTION: Do not touch the internal electrode wire. The wire is fragile and is easily damaged.

7. Install the internal reference electrode into the internal electrode compartment and screw the electrode into place.
8. Inspect the sensor for bubbles.
   As the temperature of the sensor rises to 37°C, gas driven from the solution causes bubbles.
9. Clean and inspect the sensor:
   a. Tap the front face of the sensor with your knuckle to remove any bubbles.
      If bubbles remain in the sensor, see Step 3 of *Verifying Sensor Performance*, page 5-33.
   b. Wipe any excess fill solution from the exterior of the sensor using a lint-free tissue.
10. Reinstall the sensor.
    Refer to *Installing the Sensor*, page 5-33.
11. Verify sensor performance.
    Refer to *Verifying Sensor Performance*, page 5-33.

Performing Reference Sensor Maintenance

The Reference sensor requires regular cleaning to maintain performance.

Cleaning and Inspecting the Reference Sensor

You need the following materials for this task:

- water
- Lint-free swab

BIOHAZARD: Wear personal protective equipment. Use universal precautions. Refer to *Appendix A, Protecting Yourself from Biohazards* for recommended precautions when working with biohazardous materials.

CAUTION: Do not remove or return the sensors to the measurement module without first discharging static buildup. Touch the inner surface of the measurement module frame to discharge static buildup.

1. Remove the Reference sensor.

   Refer to *Removing the Sensors*, page 5-32.

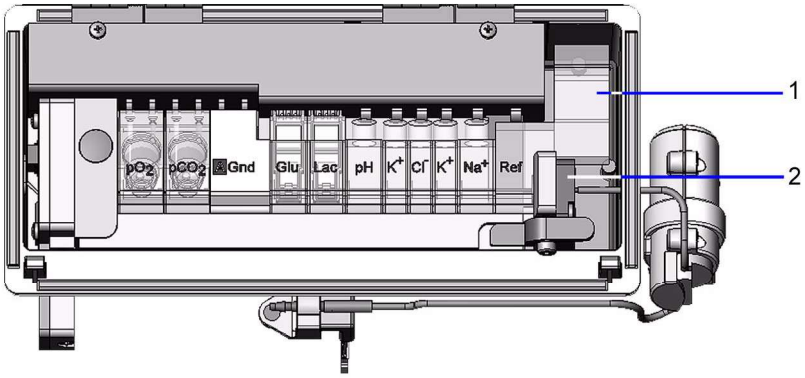

1 Reference sensor
2 Spring-loaded latch

Figure 5-15 Measurement Module

2. Check the sensor for bubbles at the electrode tip and between the electrode compartment and the KCl reservoir.

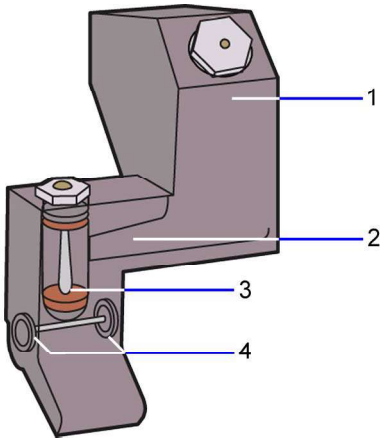

1 KCl reservoir
2 Electrode compartment join to the KCl reservoir
3 Electrode tip
4 O-rings

Figure 5-16 KCl Reservoir

NOTE: The fill solution can become slightly pink as a result of analyzing QC and AutomaticQC materials. A pink color that becomes very dark over a 12-hour period indicates a pending failure of the reference sensor. Replace the reference sensor or the reference sensor cassette.

3. Tap the front face of the sensor with your knuckle to remove any bubbles.
4. Remove any salt deposits on the reference sensor using a lint-free swab moistened with water.
5. Dry the sensor thoroughly.
6. Ensure that the O-rings are in place on both sides of the sensor.
7. Replace any O-ring that is worn or damaged.
8. Clean the O-ring area on the spring-loaded latch using a lint-free swab moistened with water.
9. Reinstall the sensor.

   Refer to *Installing the Sensor*, page 5-33.
10. Verify the sensor performance.

    Refer to *Verifying Sensor Performance*, page 5-33.

Filling the Reference Sensor Cassette

If you do not have a new reference sensor cassette, refill the reference sensor instead.

You need the following materials for this task:

- Reference electrode refill kit
- Reference electrode internal replacement kit
- Hex tool
- Lint-free tissue

BIOHAZARD: Wear personal protective equipment. Use universal precautions. Refer to *Appendix A, Protecting Yourself from Biohazards* for recommended precautions when working with biohazardous materials.

CAUTION: Do not remove or return the sensors to the measurement module without first discharging static buildup. Touch the inner surface of the measurement module frame to discharge static buildup.

1. Remove the sensor.

   Refer to *Removing the Sensors*, page 5-32.

2. Remove the internal reference electrode:

   a. Remove the internal reference electrode using the hex tool.

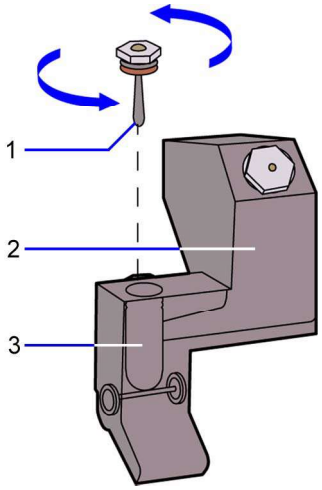

1 Internal electrode
2 Cassette
3 Internal electrode compartment

Figure 5-17 Reference Sensor Cassette

b. Stand the internal electrode on its cap to drain it.

3. Fill the internal electrode compartment of the new sensor with KCl fill solution:

   a. Insert the tip of the KCl fill solution container into the internal electrode compartment.

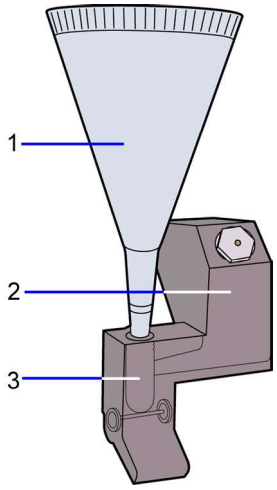

1 KCl fill solution
2 KCl reservoir
3 Internal electrode compartment

Figure 5-18 Reference Sensor Cassette and KCl Fill Solution

   b. Fill the internal electrode compartment until the KCl fill solution enters the KCl reservoir.

CAUTION: Do not touch the internal electrode wire. The wire is fragile and is easily damaged.

4. Install the internal electrode into the internal electrode compartment and screw the electrode into place using the hex tool.

5. Fill the KCl reservoir with KCl fill solution:
   a. Remove the reservoir cap using the hex tool and set the cap aside.
   b. Partially fill the KCl reservoir.
   c. Tap the front face of the sensor with your knuckle to remove any bubbles.
   d. Continue filling the reservoir with KCl fill solution to the fill line.

CAUTION: Do not overtighten the reservoir cap. Overtightening can deform the gasket and cause leaks.

6. Hand tighten the reservoir cap.
7. Clean and inspect the sensor:
   a. Tap the front face of the sensor with your knuckle to remove any bubbles.
   b. Wipe any excess fill solution from the exterior of the sensor using a lint-free tissue.
   c. Ensure that the O-rings are in place.
8. Install the Reference sensor.

   Refer to *Installing the Sensor*, page 5-33.
9. Verify sensor performance.

   Refer to *Verifying Sensor Performance*, page 5-33.

Maintaining the Internal Reference Electrode

1. Remove the internal reference electrode using the hex tool.

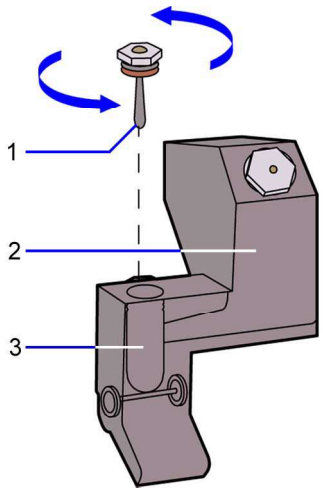

1 Internal electrode
2 Cassette
3 Internal electrode compartment

Figure 5-19 Reference Sensor Casette

2. If you are replacing the internal reference electrode, dispose of the electrode according to your institution's protocol.
3. If you are replacing the internal reference electrode, rinse the electrode compartment with KCl fill solution:
   a. Empty the fill solution from the sensor.
   b. Rinse the internal electrode compartment with 3 drops of KCl fill solution.
   c. Empty those drops of fill solution from the sensor.
4. Fill the internal electrode compartment with KCl solution.

   Refer to *Filling the Reference Sensor Cassette*, page 5-38.
5. Reinstall the sensor.

   Refer to *Installing the Sensor*, page 5-33.
6. Verify sensor performance.

   Refer to *Verifying Sensor Performance*, page 5-33.

Performing Measurement Sensor Maintenance

You need the following materials for this task:

- appropriate sensor fill solution kit
- lint-free tissue

The following table lists the fill solution to use for each sensor:

Sensor	Fill Solution
pH	pH
Na^+, K^+, Cl^-, Ca^{++}	Na^+, K^+, Cl^-, Ca^{++}

BIOHAZARD: Wear personal protective equipment. Use universal precautions. Refer to *Appendix A, Protecting Yourself from Biohazards* for recommended precautions when working with biohazardous materials.

CAUTION: Do not remove or return the sensors to the measurement module without first discharging static buildup. Touch the inner surface of the measurement module frame to discharge static buildup.

1. Remove the sensor.

   Refer to *Replacing the Sensors*, page 5-31.

2. Unscrew the internal electrode, and place the electrode and the sensor assembly on a lint-free tissue.

3. Empty and rinse the sensor

   a. Empty the fill solution from the sensor.

   b. Rinse the sensor:

For this sensor...	Rinse...
pH,	the internal electrode compartment with 3 drops of pH fill solution.
Na^+, K^+, Cl^-, and Ca^{++},	the internal electrode compartment with 3 drops of the Na^+, K^+, Cl^-, and Ca^{++} fill solution.

   c. Empty the drops of fill solution from the sensor.

4. Add fill solution:

For these sensors...	Add...
pH Na^+, K^+, Cl^-, and Ca^{++}	K^+, Cl^-, and Ca^{++} sensors almost full but with a small space (1 mm)at the top

CAUTION: Do not touch the internal electrode wire. The wire is fragile and is easily damaged.

5. Install the internal reference electrode into the internal electrode compartment and screw the electrode into place.
6. Clean and inspect the sensor:
   a. Tap the front face of the sensor with your knuckle to remove any bubbles.
   b. Wipe any excess fill solution from the exterior of the sensor using a lint-free tissue.
   c. Verify that the O-ring is in place on the left side of the sensor.
      Replace the O-ring if it is worn or damaged.
7. Reinstall the sensor.
   Refer to *Installing the Sensor*, page 5-33.
8. Verify sensor performance.
   Refer to *Verifying Sensor Performance*, page 5-33.

Replacing System Components

This section contains procedures for replacing system components.

Replacing the Printer Paper

Replace the printer paper when a red stripe is displayed on the edge of the paper.

You need printer paper for this task.

1. Select **Status > Maintenance > Replacing the Printer Paper**.
2. To start the procedure, select **Continue**.

CAUTION: Do not pull the torn paper back through the printer. This can damage the printing mechanism.

3. Follow the instructions in the video.

Replacing the Sample Port

Use this procedure to replace the sample port. Replace the sample port if you detect a problem, or if the system prompts you as a result of obstructions such as fibrin clots.

You need a sample port for this task.

BIOHAZARD: Wear personal protective equipment. Use universal precautions. Refer to *Appendix A, Protecting Yourself from Biohazards* for recommended precautions when working with biohazardous materials.

1. Select **Status > Maintenance > Replace Sample Port**.
2. To start the procedure, select **Continue**.
3. Follow the instructions in the video.

Replacing the CO-ox Lamp

WARNING: Do not touch the lamp until it has been off for at least 5 minutes. Waiting for at least 5 minutes allows sufficient time for the lamp to cool.

You need a CO-ox lamp for this task.

1. Ensure that the system is not performing any analysis.

CAUTION: Do not remove power from the system for more than 6 hours if cartridges are installed. Cartridges installed in the system remain stable for 6 hours without power.

WARNING: To prevent damage to the hard drive and permanent loss of data, use this procedure to shut down the system.

2. Shutdown the system:
   a. Select **Status > Shutdown > Yes**.
   b. When prompted, turn the power switch off.
      The power switch is on the back panel of the system.
3. Move the system so that you are able to work directly behind the system.
4. For ease of access, prop the back of the system up by about 3/4 inch (1.9 cm).

   When you prop up the back of the system, the back cover can lay flat when you open it.

5. Open the back cover.

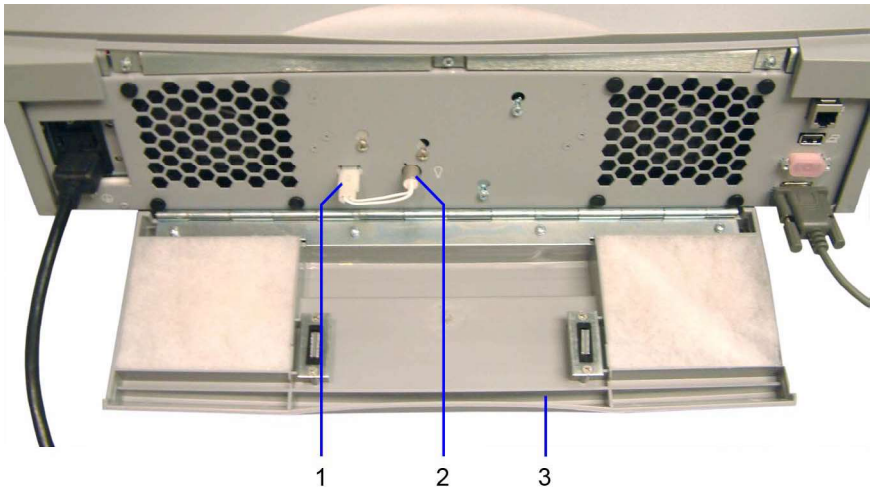

1 Electrical connector
2 Lamp base
3 Back cover

Figure 5-20 RAPIDLab 1200 System–back view

6. Remove the lamp:
   a. Stand directly behind the system and grasp the base of the lamp.
   b. Pull the lamp out straight toward you.
   c. Grasp the electrical connector and pull it straight back to disconnect it. Pull steadily with increasing force until it comes free.
7. Dispose of the lamp according to your institution's protocol.

CAUTION: Avoid touching the new CO-ox lamp with your fingers. Touching the glass may cause the lamp to prematurely deteriorate.

8. Install a new lamp:
   a. Push the new lamp into the lamp receptacle area.
      The lamp has a key that you must line up with the key hole in the side of the receptacle area.
   b. Push the electrical connector onto the electrical fitting.
9. Close the back cover.

10. Start up the system:
    a. Turn the power switch on.
    b. At the interface screen, use the numeric buttons to enter your password.
    c. Select **Continue**.

Replacing the CO-ox Roller Cage

Use this procedure to replace the roller cage of the CO-ox pump.

You need the following materials for this task:

- Lint-free tissue and swabs
- Roller cage
- water

BIOHAZARD: Wear personal protective equipment. Use universal precautions. Refer to *Appendix A, Protecting Yourself from Biohazards* for recommended precautions when working with biohazardous materials.

Removing the Roller Cage

1. Select **Status > Maintenance**.
2. Lift the front cover.

   Refer to *Preparing for Maintenance Procedures*, page 5-1.
3. Disconnect the reagent manifold tubing from the CO-ox pump tubing at the fitting.

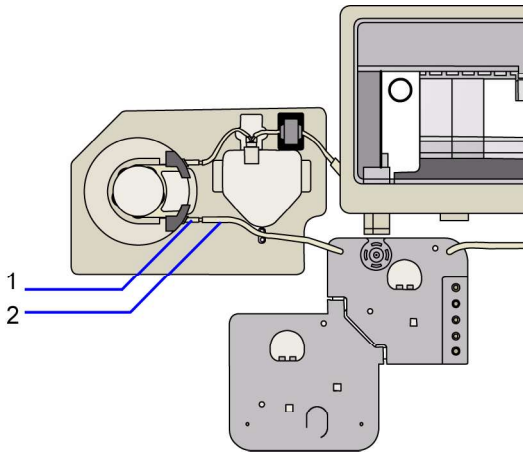

1 Fitting
2 Reagent manifold tubing

Figure 5-21 CO-ox Module and Reagent Manifold

4. Grasp the lower tubing cuff and gently pull it away from the platen.
5. While holding the lower side of the tubing, turn the roller cage clockwise and gently pull the tubing away from the platen and the roller cage.

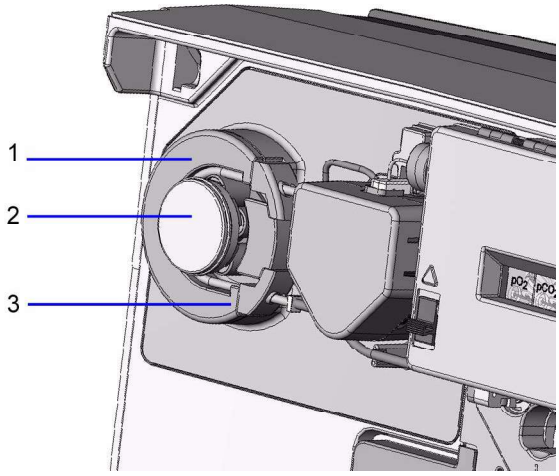

1 Platen
2 Roller cage
3 Lower tubing cuff

Figure 5-22 CO-ox Module

6. Gently pull the roller cage straight off its shaft.
7. Dispose of the roller cage according to your institution's protocol.

Cleaning the Roller Cage Shaft

Clean the roller cage shaft using lint-free tissues moistened with water and then thoroughly dry the shaft.

Installing the New Roller Cage

1. Place the new roller cage on the shaft.
2. Press the roller cage down and turn the cage clockwise until the cage snaps into place.
3. Place the lower tubing cuff under the lower side of the platen.

   NOTE: Do not stretch the tubing.

4. Press the tubing around the outside of the rollers.
5. Place the upper tubing cuff onto the upper side of the platen.
6. Turn the roller cage clockwise to gently work the new tubing between the platen and the roller cage.
7. Connect the CO-ox pump tubing to the reagent manifold tubing.
8. Close the front cover.
9. Select **Return**.
10. Perform a full calibration.

    For information about performing calibrations, refer to *Recalling Calibration Results*, page 3-4.

Replacing the System Fuses

Replace both fuses if 1 or both of the fuses are blown.

Before replacing the fuses, verify that power is being supplied to the system:

- The power switch on the back panel is turned on.
- The power cord is firmly connected to the system and to the electrical outlet.
- The electrical outlet is working.

You need the following materials for this task:

- Two fuses of the appropriate rating
- Screwdriver

The RAPIDLab 1200 systems use the following fuses for the voltages shown:

Voltage	Fuse Rating	Fuse Type
100–240V	1.6A Slo Blo	5 x 20 mm

WARNING: Do not proceed while the power is on. To prevent electrical shock or damage to the system, remove power from the system as described in this procedure.

CAUTION: Do not remove power from the system for more than 6 hours if cartridges are installed. Cartridges installed in the system remain stable for 6 hours without power.

1. Select **Status > Shutdown > Yes**.

   The system displays the Shutdown screen and stops all fluidic sequences so that no damage to the cartridges can occur.

2. Turn the power off and disconnect the power cord from the electrical outlet.
3. Open the fuse holder:
   a. Insert a small flat-head screwdriver in the tabs on each side of the fuse holder.
   b. Pull the fuse holder out from the compartment as far as possible.

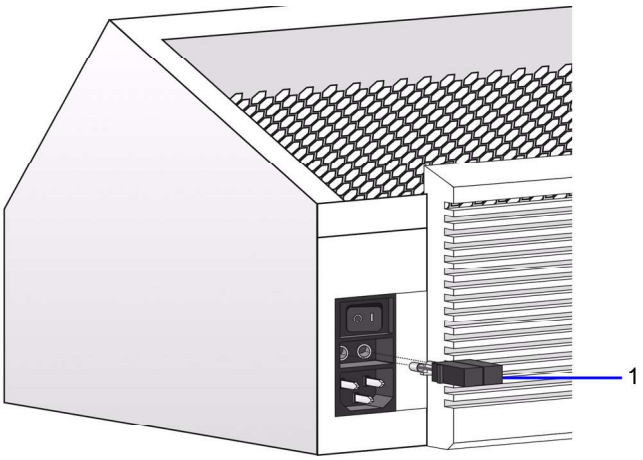

1 Fuse holder

Figure 5-23 Fuse Holder

4. Remove the old fuses and dispose of them according to your institution's protocol.
5. Install new fuses.
6. Slide the fuse holder into the fuse compartment.
7. Restore power:
   a. Reconnect the power cord to the system.
   b. Reconnect the power cord to the electrical outlet.
   c. Turn the power on.

Relocating the System

Use this procedure to move the system for use in another area.

WARNING: Do not proceed while the power is on. To prevent electrical shock or damage to the system, remove power from the system as described in this procedure.

CAUTION: Do not remove power from the system for more than 6 hours if cartridges are installed. Cartridges installed in the system remain stable for 6 hours without power.

WARNING: Do not operate the system in the presence of flammable anesthetic mixture with air, O_2, or nitrous oxide. The risk of explosion exists in a potentially explosive environment. Refer to *Protecting Yourself from Electrical Hazards*, page A-3 for recommended precautions when working around electricity.

1. Select **Status > Shutdown**.
2. When the system displays the Shutdown screen, turn the power off and disconnect the power cord from the electrical outlet.
3. Disinfect the exterior surfaces of the system.

   Refer to *Cleaning and Disinfecting the Exterior Surfaces*, page 5-2.
4. Move the system to its new location.
5. To restore power to the system, connect the power cord to the electrical outlet.
6. Turn the power on.

Shipping or Storing the System

BIOHAZARD: Wear personal protective equipment. Use universal precautions. Refer to *Appendix A, Protecting Yourself from Biohazards* for recommended precautions when working with biohazardous materials.

WARNING: Do not proceed while the power is on. To prevent electrical shock or damage to the system, remove power from the system as described in this procedure.

Shipping or storing the system involves 5 basic steps:

1. Clean the sample path with bleach.
2. Remove the cartridges.
3. Clean and dry the tubing.
4. Remove and store the sensors.
5. Remove peripherals and disinfect the exterior surfaces.

When you are ready to dispose of the system, observe federal, state, and local codes or requirements for disposal or recycling. Use the following procedures to prepare the system for long term storage, shipping to another location for repair, or for disposal.

Cleaning the Sample Path

Refer to *Cleaning the Sample Path*, page 5-24.

Removing the Cartridges

1. Select **Status > Diagnostics > Cartridges**.
2. If an AutomaticQC cartridge is installed, remove and dispose of it according to your institution's protocol:
   a. Slide the connector on the AutomaticQC cartridge to the right.
   b. Select **Eject AQC Cartridge**.
3. Select **Eject Both Cartridges**, remove the reagent and wash cartridges, and dispose of them according to your institution's protocol.
4. In Setup, turn the AutomaticQC option off:
   a. Select **Setup > QC Options > Unscheduled QC**.
   b. Select **Save**.

Cleaning and Drying the Tubing

Ensure that you follow these instructions using at least the minimum volumes of fluid and air described in these procedures.

Flushing the Tubing for the RCx Reagent

1. Connect a piece of tubing to a syringe.
2. Connect the syringe tubing to the connector for the RCx reagent.

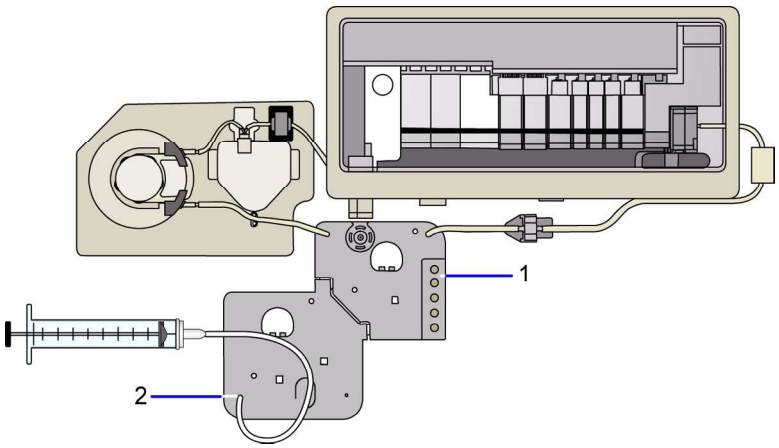

1 Water collection area
2 RCx reagent Connector

Figure 5-24 Reagent Manifold

3. Flush with a minimum of 3 mL water.
4. Flush with a minimum of 12 mL air.
5. Collect the water in an absorbent swab or equivalent.

Flushing the Upper Connector

1. Connect the syringe tubing to the upper connector for the wash reagent.

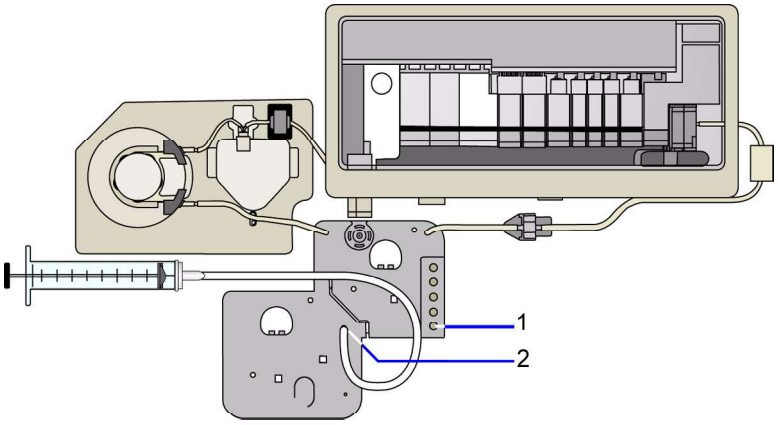

1 Water collection area
2 Upper connector

Figure 5-25 Reagent Manifold

2. Flush with a minimum of 3 mL water.
3. Flush with a minimum of 12 mL air.
4. Collect the water in an absorbent swab or equivalent.

Flushing the Lower Connector

1. Connect the syringe tubing to the lower connector for the wash reagent.
2. Flush with a minimum of 3 mL water.
3. Flush with a minimum of 12 mL air.
4. Capture the water in an absorbent swab or equivalent.

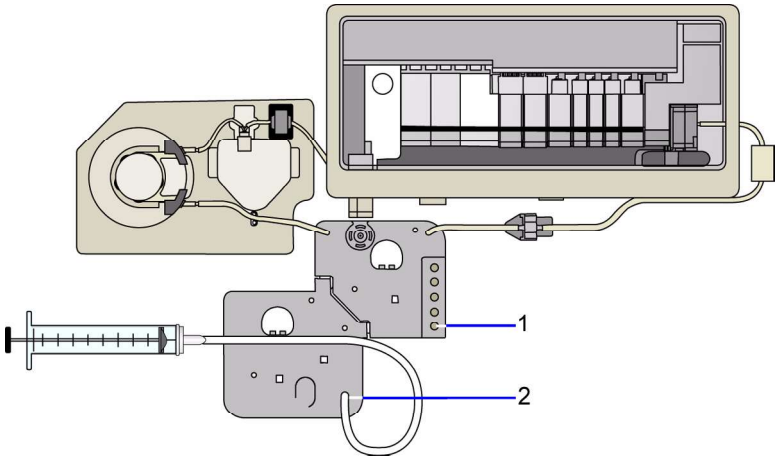

1 Water collection area
2 Lower connector

Figure 5-26 Reagent Manifold Lower Connector

Flushing the Tubing for the Samples

1. Connect the syringe tubing to the connector for samples.
2. Flush the sample tubing with a minimum of 3 mL water.
3. Flush the sample tubing with a minimum of 12 mL air.
4. Collect the water in an absorbent swab or equivalent.

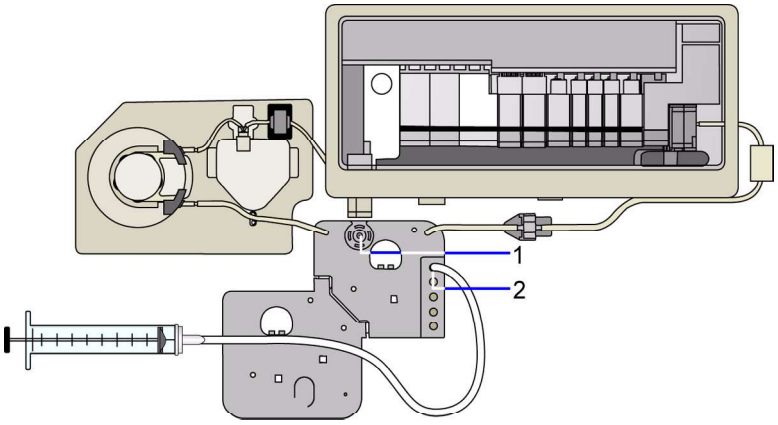

1 Water collection area
2 Sample connector

Figure 5-27 Sample Tubing

Flushing the Tubing for the Measurement Module

1. Disconnect the tubing from the left side of the pressure sensor bubbler.
2. Connect the syringe tubing to the pressure sensor bubbler.
3. Flush the measurement module tubing with a minimum of 3 mL water.
4. Flush the measurement module tubing with a minimum of 12 mL air.
5. Collect the water in an absorbent swab or equivalent.
6. Reconnect the tubing to the pressure sensor bubbler.

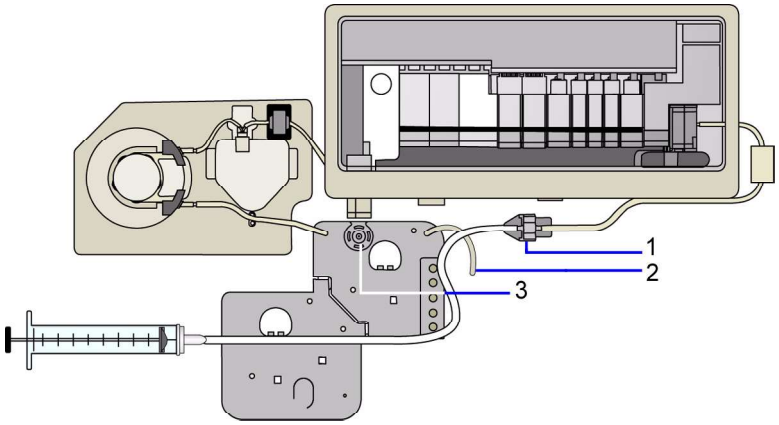

1 Pressure sensor bubbler
2 Disconnected tubing
3 Water collection area

Figure 5-28 Measurement Module Pressure Sensor Bubbler

Flushing the Tubing for the Measurement Module Waste

1. Disconnect the tubing on the reagent manifold coming from the pressure sensor bubbler.
2. Connect the syringe tubing to the connector on the reagent manifold.

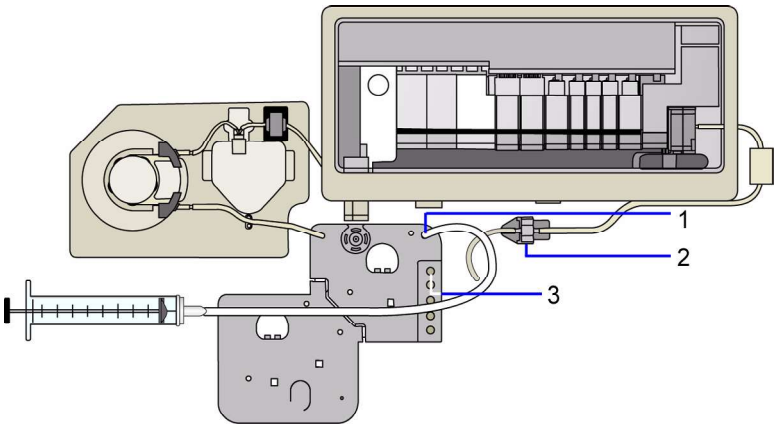

1 Connector
2 Pressure sensor bubbler
3 Water collection area

Figure 5-29 Reagent Manifold Connector

3. Flush the tubing with a minimum of 3 mL of water.
4. Flush the tubing with a minimum of 12 mL air.
5. Collect the water in an absorbent swab or equivalent.
6. Reconnect the tubing to the reagent manifold.

Flushing the Tubing for the AutomaticQC Module

1. Connect the syringe tubing to the AutomaticQC manifold.
2. Flush with a minimum of 3 mL water.

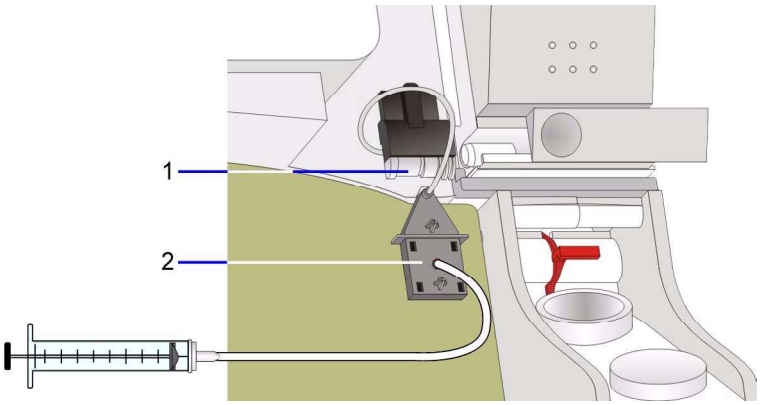

1 Water collection area
2 AutomaticQC manifold

Figure 5-30 AutomaticQC Tubing

3. Flush with a minimum of 12 mL air.
4. Collect the water in an absorbent swab or equivalent.
5. Disconnect the syringe tubing.

Flushing the Reagent Manifold Tubing

This section applies to the RAPIDLab 1245 and 1265 systems.

1. Disconnect the reagent manifold tubing from the CO-ox pump tubing.
2. Connect the syringe to the waste tubing.

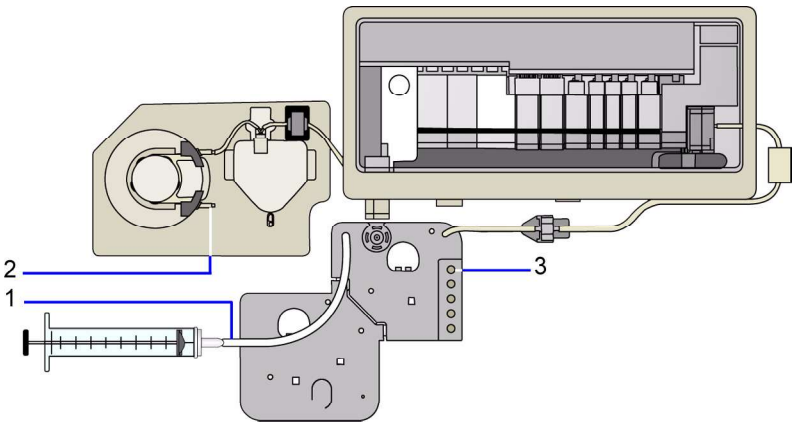

1 Connector
2 Waste tubing
3 Water collection area

Figure 5-31 Reagent Manifold–RAPIDLab 1245 and 1265 Systems

3. Flush the waste tubing with a minimum of 3 mL water.
4. Flush the waste tubing with a minimum of 12 mL air.
5. Collect the water in an absorbent swab or equivalent.
6. Reconnect the reagent manifold tubing from the CO-ox pump tubing.

Flushing the CO-ox Pump Tubing

This section applies to the RAPIDLab 1245 and 1265 systems.

1. Remove the CO-ox roller cage.
2. Disconnect the CO-ox sample tubing from the connector on the measurement module.

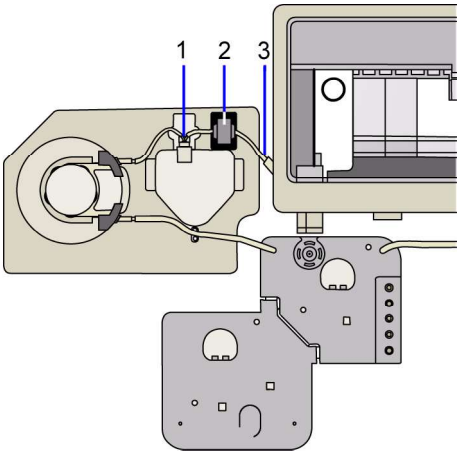

1 Sample chamber connector
2 Fluid detector
3 Measurement module connector, collect the water here

Figure 5-32 CO-ox Sample Chamber Tubing

3. Flush the tubing with a minimum of 3 mL water.
4. Flush the tubing with a minimum of 12 mL air.
5. Collect the water in an absorbent swab or equivalent.
6. Reinstall the CO-ox roller cage.
7. Reconnect the CO-ox pump tubing and the CO-ox sample tubing.
8. Remove the CO-ox sample chamber and discard it according to your institution's protocol.
9. To exit Diagnostics, close the cartridge doors.
10. Select **Return**.

Removing and Storing the Sensors

1. Select **Status > Maintenance > Performing Sensor Maintenance**.
2. To start the procedure, select **Continue**.
3. Remove the sensor:
   a. Lift the front cover, push up the latches on the measurement module door, and then lift the door.
   b. Push the spring-loaded latch to the right.
   c. Grasp the tab on the sensor and pull the sensor up and out.
4. Store each sensor in the original packaging.

Removing Peripherals and Disinfecting the Exterior Surfaces

1. Remove the waste bottle and dispose of it according to your institution's protocol.
2. Clean and disinfect the exterior surfaces.

   Refer to *Cleaning and Disinfecting the Exterior Surfaces*, page 5-2.
3. Remove the roll of printer paper and remove any remaining paper from the printer by turning the paper-advance knob clockwise.

Shutting Down and Packing the System

1. Select **Status > Shutdown > Yes**.
2. After the system displays the Shutdown screen, turn the power off and disconnect the power cord from the electrical outlet and from the system.
3. If the optional barcode scanner is installed, disconnect the barcode scanner.
4. Pack the system in the original shipping carton.

   If the original carton is no longer available, contact your local technical support provider or distributor for a replacement shipping carton.

Scheduling Maintenance Activities

The maintenance schedule displays the maintenance tasks that are currently scheduled. The schedule displays a calendar week with the day and date at the top of the schedule and the state of each task in the grid.

Task state	Background	Indicator
Overdue	red	[blank]
Due	yellow	solid circle
Not Due	green	[blank]
As Required	green	[blank]
Completed		check mark

You can navigate from week to week by using the right and left pointing arrows at the top of the right panel. You can navigate within the schedule grid, moving down the task list or back and forth through the days of the week by using the four directional arrows at the middle of the right panel. The currently selected cell has a white background.

Performing Scheduled Maintenance Tasks

After performing a maintenance task, you must mark it Complete on the schedule. Some tasks, like Deproteinizing the Sample Path, automatically mark the schedule as Complete but you should check for the Complete mark after completing each Maintenance task.

If you complete the task within the grace period, the task is automatically scheduled for its next due date.

- If you complete a task before the grace period, the system does not change the schedule and you are prompted to perform that task again during its regularly scheduled time.
- If you complete a task after the grace period, the next task is scheduled for the scheduled time period after you actually perform the task.

To record a maintenance task, perform the following steps:

1. Select **Status > Maintenance > Schedule**.
2. Select the maintenance task you want to record as completed.
3. Select **Completed**.

Maintenance Task Grace Period

The Grace Period is a defined amount time before or after the scheduled due date. When you perform a maintenance task within this grace period and mark the task as complete, the system automatically sets the next date for the task. The grace periods supported for the maintenance tasks are shown in the following table:

Frequency of Task	Grace Period
Daily	None
Twice Weekly	+ 1 day
Weekly	+ 1 day
Every Two Weeks	+ 1 day
Monthly	+ 1 day
Every Two Months	+ 3 days
Quarterly	+ 3 days
Twice Yearly	+ 3 days
Yearly	+ 3 days
As Required	None

Marking Maintenance Tasks Complete

NOTE: You can only mark tasks Completed on the current date for either of the previous two days. When you select any other day in the calendar grid, the system disables the Completed button.

1. Select **Status > Maintenance > Schedule**.
2. Select the maintenance task you completed.
3. Select **Completed**.

Undoing the Completed Marker

When you select the Completed button to mark a task as completed, it becomes an Undo button. If you marked the task incorrectly, you can now undo the mark.

Viewing Maintenance Task Details

The following information is available on the Details screen:

- Description
- Next Due
- Last Performed

  This area is blank if the selected task is "As required."
- Frequency

To view maintenance task details, perform the following steps.

1. Select **Status > Maintenance > Schedule**.
2. Select the maintenance task you want to view.
3. Select **Details**.

Change System Time for Daylight Saving Time

NOTE: Setting the date on the system clock back (as for daylight saving time) eliminates all maintenance completions performed within that hour.

For instructions on setting system time, refer to *Setting up the Date and Time*, page 8-21.